| BRIDGE PLANS ID | SHEET NO. |
|---|---|
| P041231-B01 | 1 |

INDEX OF SHEETS


1. TITLE SHEET
2. BRIDGE PLAN AND PROFILE
3. BRIDGE TYPICAL SECTION


South Carolina Department of Transportation

# PROPOSED PLANS FOR

# PICKENS COUNTY
# PROJECT ID P041231
# STATE ROUTE SC 183 (WALHALLA HWY.)
# REPLACE BRIDGE OVER TWELVE MILE CREEK

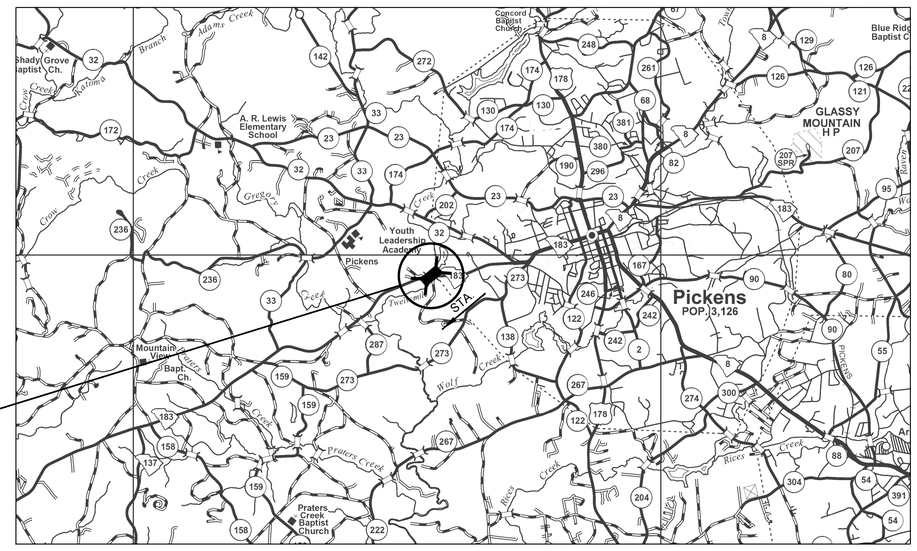


SITE LOCATION

LAYOUT

Approximate Location of Bridge is

| | |
|---|---|
| Latitude | 34°-52′-32″ N |
| Longitude | 82°-44′-37″ W |

3 DAYS BEFORE DIGGING IN
SOUTH CAROLINA

CALL 811

SOUTH CAROLINA 811 (SC811)
WWW.SC811.COM
ALL UTILITIES MAY NOT BE A MEMBER OF SC811

ASSET ID NOT ASSIGNED

TRAFFIC DATA

2020 ADT 6,000 V.P.D.

2040* ADT 10,800* V.P.D.

TRUCKS 8 %

*DESIGN TRAFFIC DATA

| | | |
|---|---|---|
| NET LENGTH OF ROADWAY | 0.000 | MILES |
| NET LENGTH OF BRIDGES | 0.054 | MILES |
| NET LENGTH OF PROJECT | 0.054 | MILES |
| LENGTH OF EXCEPTIONS | 0.000 | MILES |
| GROSS LENGTH OF PROJECT | 0.054 | MILES |

NOTE: EXCEPT AS MAY OTHERWISE BE SPECIFIED ON THE PLANS OR IN THE SPECIAL PROVISIONS, ALL MATERIALS AND WORKMANSHIP ON THIS PROJECT SHALL CONFORM TO THE SOUTH CAROLINA DEPARTMENT OF TRANSPORTATION STANDARD SPECIFICATIONS FOR HIGHWAY CONSTRUCTION (2007 EDITION) AND THE STANDARD DRAWINGS FOR ROAD CONSTRUCTION IN EFFECT AT THE TIME OF LETTING.

CONSULTING ENGINEERING FIRM

HDR

ENGINEER OF RECORD

**CONCEPTUAL PLANS**

**NOT FOR CONSTRUCTION**

FOR CONSTRUCTION : _____ _____
DATE

RMCKENNA
12-16-22
bP041231-B01_ts.dgn

| REVIEWED | | |
|---|---|---|
| DR. | RAM | AIZ | 11-22 |
| | BY | CHK | DATE |

| BRIDGE PLANS ID | SHEET NO. |
|---|---|
| P041231-B01 | 2 |

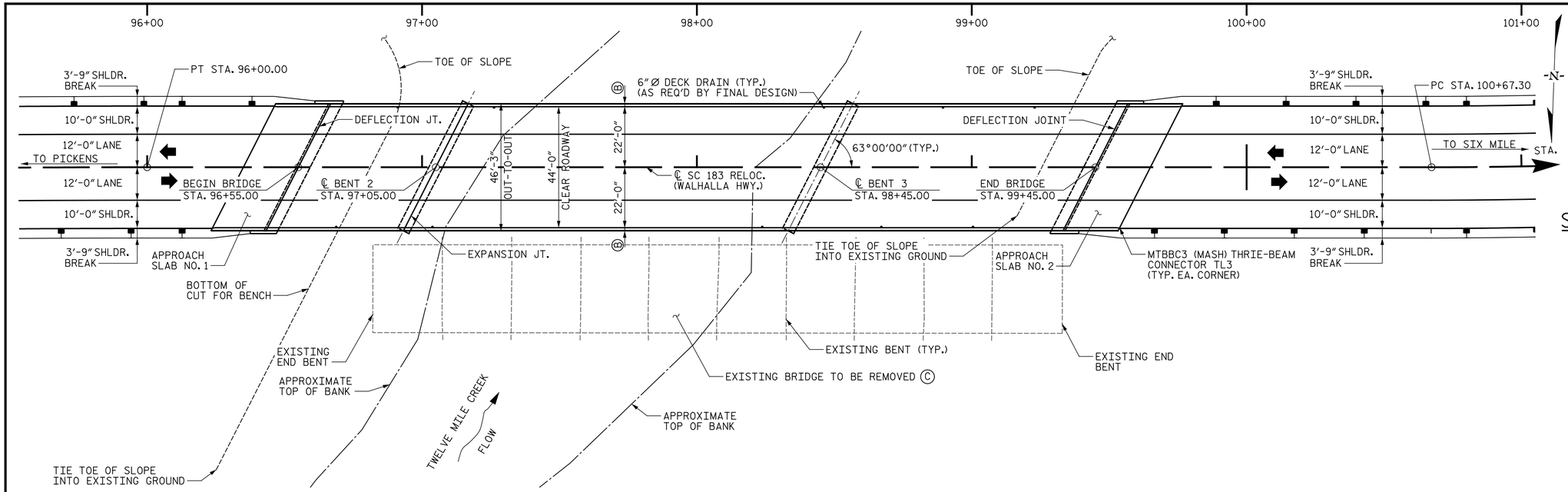


## PLAN

NOTE: BRIDGE END DRAINAGE IS NOT SHOWN.

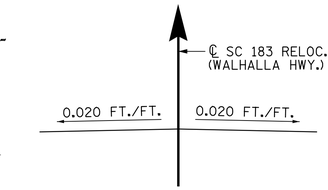


TYPICAL THROUGHOUT BRIDGE

## SUPERELEVATION SKETCH

### HORIZONTAL CURVE DATA

| | |
|---|---|
| P.I. = 93+04.07 | P.I. = 103+82.94 |
| Δ = 4°09'46" (RT.) | Δ = 19°53'31" (LT.) |
| Dc = 0°42°11" | Dc = 3°10°59" |
| T = 296.19' | T = 315.64' |
| L = 592.12' | L = 624.92' |
| E = 5.38' | E = 27.46' |
| R = 8,150.00' | R = 1,800.00' |

### CONTROL POINTS

CP 29 GEO DISK
ELEVATION = 902.42'
N 1111331.374 E 1477278.465

CP 30 MAG HUB
ELEVATION = 902.37'
N 1111362.986 E 1476853.057

BM1 RR SPIKE
ELEVATION = 900.39
N 1111266.733 E 1477267.042

### HYDROLOGY DATA

D.A. = 52.3 SQ. MILES
Q_50 = 7,212 CFS
VELOCITY_50 = 5.3 FPS
AREA FURNISHED UNDER_50 = 1,645.6 SQ. FT.
Q_100 = 8,300 CFS
VELOCITY_100 = 5.5 FPS
AREA FURNISHED UNDER_100 = 1,777.4 SQ. FT.

### OVERTOPPING FLOOD

Q = 10,979 CFS
PROBABILITY < 0.2%

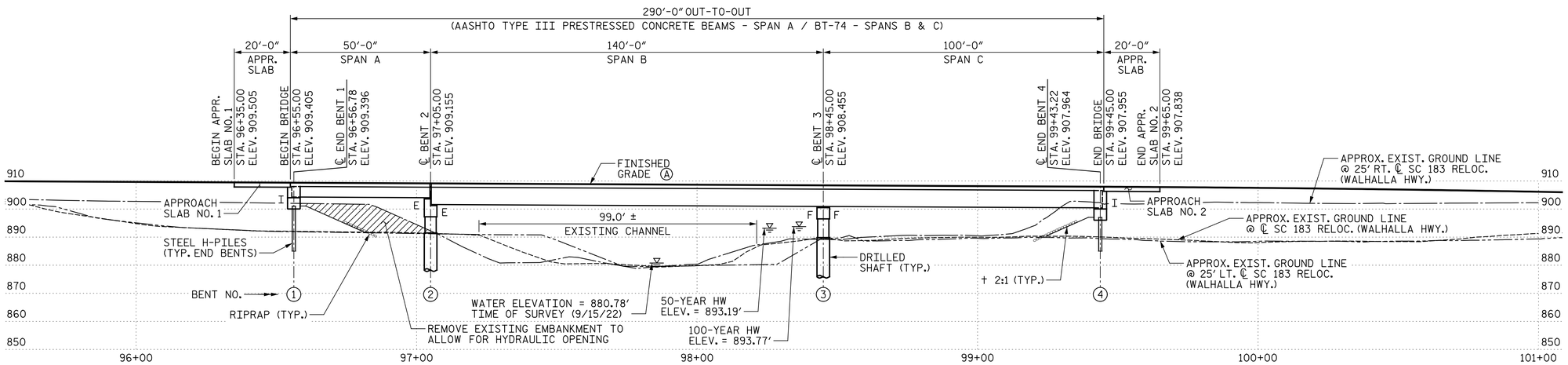


## SECTION ALONG ℄ SC 183 RELOC. (WALHALLA HWY.)

### VERTICAL CURVE DATA

| | |
|---|---|
| PVI = 93+50.00 | PVI = 100+45.00 |
| ELEV. 910.93 | ELEV. 907.45 |
| V.C. = 420' | V.C. = 200' |

-4.85% -0.50% -2.19%

NOTES:

Ⓐ PROPOSED PROFILE SET SO THAT THE LOW CHORD ELEVATION IS AT OR ABOVE THE EXISTING LOW CHORD ELEVATION.

Ⓑ INCLUDES 1'-0" MASH BARRIER PARAPET AND 1½" SLAB EXTENSION.

Ⓒ REMOVE AND DISPOSE OF EXISTING 37'-6" × 250'-0"± STEEL AND CONCRETE BEAM BRIDGE AND APPURTENANCES IN ACCORDANCE WITH SECTION 202.4.2 OF THE STANDARD SPECIFICATIONS AND ENVIRONMENTAL REQUIREMENTS.

E - DENOTES EXPANSION BEARING

F - DENOTES FIXED BEARING

I - DENOTES INTEGRAL END BENT

† - NORMAL TO SKEW

= EXCAVATE HATCHED AREA OF EXISTING BANK TO ALLOW FOR HYDRAULIC OPENING

| | | | |
|---|---|---|---|
| REV. | | | |
| REV. | | | |
| REV. | | | |
| REVIEWED | | | |
| QUAN. | | | |
| DR. | RAM | BDR | 11-22 |
| DES. | | | |
| | BY | CHK. | DATE |

**CONCEPTUAL PLANS**

**NOT FOR CONSTRUCTION**


HDR ENGINEERING INC. OF THE CAROLINAS
1201 MAIN STREET
SUITE 800
COLUMBIA, SC 29201
803-509-6600


SOUTH CAROLINA
DEPARTMENT OF TRANSPORTATION

BRIDGE PLAN AND PROFILE

SC 183 (WALHALLA HWY.) BRIDGE REPLACEMENT OVER TWELVE MILE CREEK

| COUNTY | ROUTE |
|---|---|
| PICKENS | SC 183 |


CADD FILE INFORMATION 4:07:21 PM
PLOTTED DATE: 12-22-22
FILE NAME: bP041231-B01_bp.dgn

| BRIDGE PLANS ID | SHEET NO. |
|---|---|
| P041231-B01 | 3 |

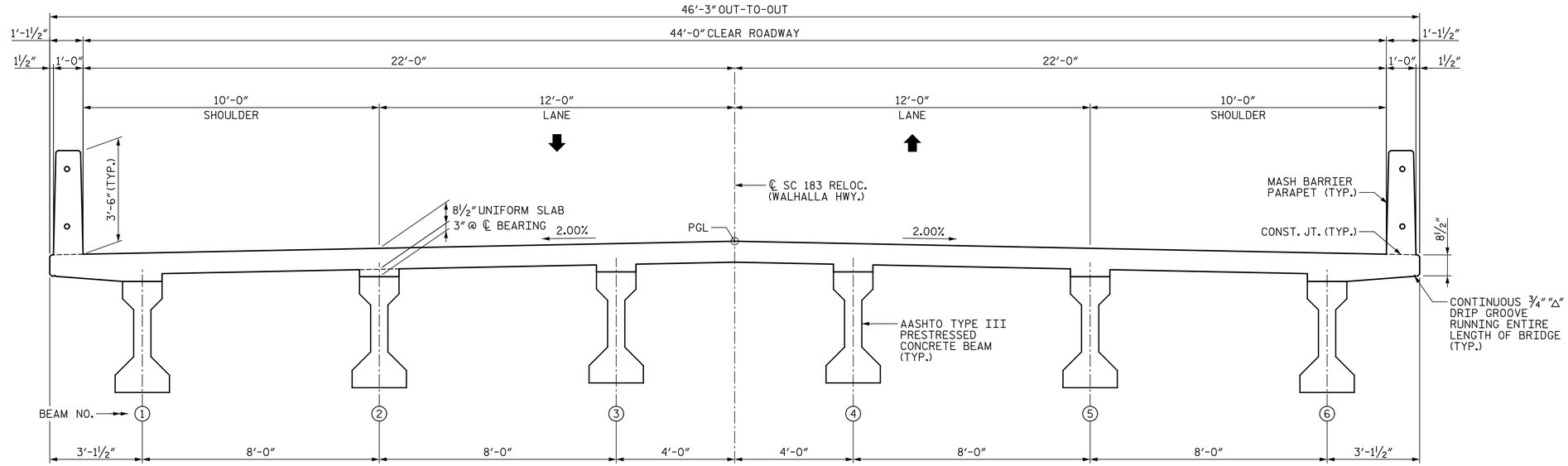


## TYPICAL SECTION - SPAN A

(LOOKING IN DIRECTION OF STATIONING)

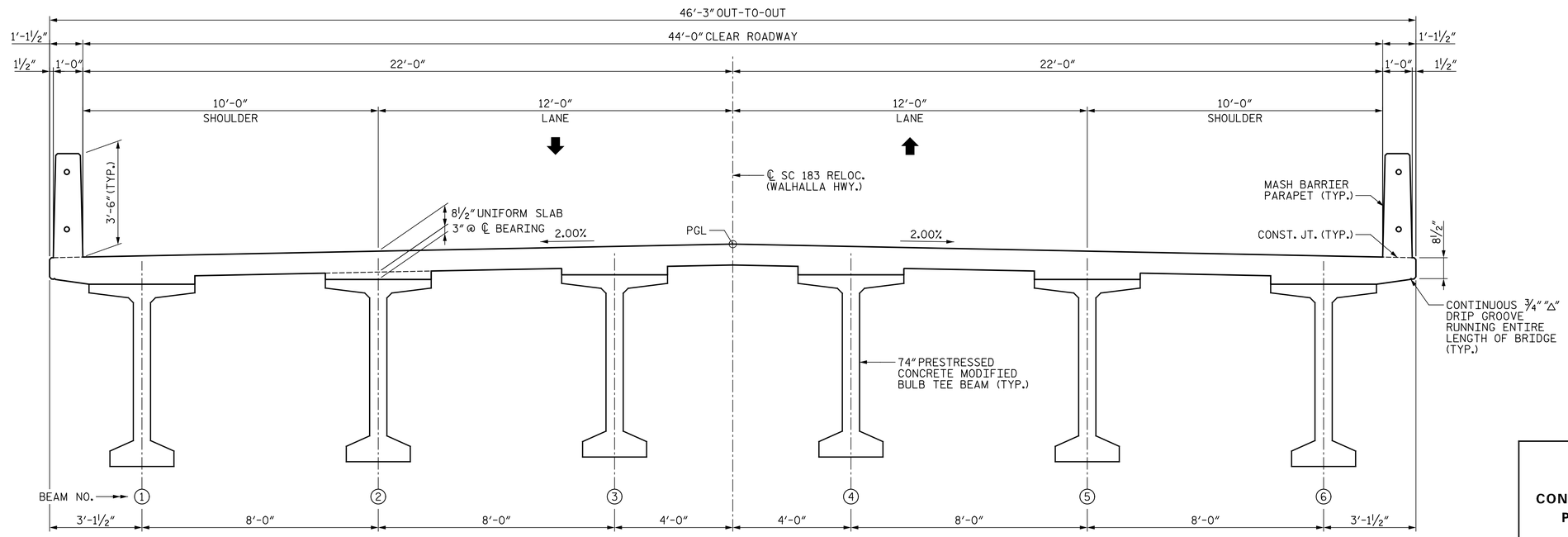


## TYPICAL SECTION - SPANS B & C

(LOOKING IN DIRECTION OF STATIONING)

| | | | |
|---|---|---|---|
| REV. | | | |
| REV. | | | |
| REV. | | | |
| REVIEWED | | | |
| QUAN. | | | |
| DR. | RAM | AIZ | 11-22 |
| DES. | | | |
| | BY | CHK. | DATE |

**CONCEPTUAL PLANS**

**NOT FOR CONSTRUCTION**


HDR ENGINEERING INC. OF THE CAROLINAS
1201 MAIN STREET
SUITE 800
COLUMBIA, SC 29201
803-509-6600


SOUTH CAROLINA
DEPARTMENT OF TRANSPORTATION

# BRIDGE TYPICAL SECTION

SC 183 (WALHALLA HWY.) BRIDGE REPLACEMENT OVER TWELVE MILE CREEK

| COUNTY | ROUTE |
|---|---|
| PICKENS | SC 183 |


CADD FILE INFORMATION 12:03:19 PM
PLOTTED DATE: 12-16-22
FILE NAME: bP041231-B01_ss.dgn